1. MATERIAL: ALNICO 5, SINTERED OR CAST
2. MAGNETIZATION LEVEL: SEE BELOW
3. MAGNETIZATION DIRECTION: PARALLEL TO LENGTH
4. DIMENSIONS: AS SHOWN
5. SQUARNESS: 1°
6. PACKING: PREFERRED METHOD IS SHRINK WRAPPED ON CARDBOARD FLATS; 100,500, OR 1000 PER FLAT; POLES ATTRACTING. OTHER METHODS MAY BE ACCEPTABLE WITH APPROVAL.

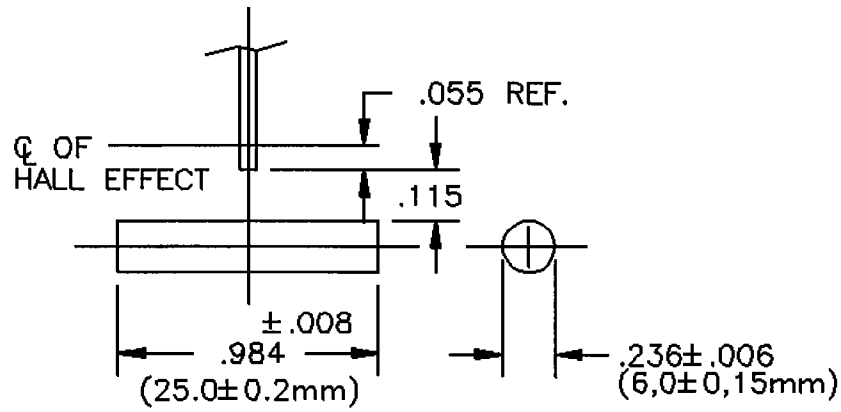

MAGNETIZATION LEVEL USING F.W. BELL METER 4048 AND TRANSVERSE PROBE #1706
175 GAUSS MINIMUM MEASURED AT THE MAGNETS CENTER AT AN AIR GAP OF .115"
PER ABOVE DRAWING. (TN-3933-C)

625 MAGNET							HAMLIN, Inc.		DCR No. 9387
AC	ADD PACKAGING	A6860	JC	2/18/98	JC	2/18/98	Dwn. GJ	DATE 2/15/84	250-70-402
REV.	DESCRIPTION OF REVISION	DCR No.	BY	DATE	APP.	DATE	App'd GJ	DATE 2/20/84	Page 1 of 1